MY 2019 H625 MP2 Design
TABLE OF CONTENT

B3 POWERTRAIN ENGINE CONTROLS

PHJC46-70B051-A1 ENGINE CONTROL SYSTEM (ENGINE SIDE)
PHJC46-70B051-A2 ENGINE CONTROL SYSTEM (ENGINE SIDE)

C3 VEHICLE NETWORKS

PHJC46-70C030-A2 ENGINE CAN J1939 NETWORK

TOPOLOGY SHEET

LTRS	REVISIONS		
ORIGINATOR	CHECKER	ENGR APP	MATL APP

RELEASED OESE-E-13302392-028 170316

FKARADE3	AGEZER1	SKILICAR	MATL APP

H625 TT PHASE RELEASE

REMOVED PHJC46-70002-BA
RELEASED PHJC46-70002-BB

C13503396, C13503403, C13503406, C13503485, C13503875, C13506791, C13505065, C13504369, C13504371, C13541650, C13498882, C13499095, C13526401, C13494134, C13493284, C13494291, C13494463, C13494378, C13495402, C13495387, C13494615, C13494656, C13396165, C13495181, C13495194, C13495214, C13495217, C13495219, C13506323, C13497953.

DCRs
533, 548, 549, 552, 553, 554, 555, 556, 557, 558, 559, 560, 581, 592, 593, 594, 598, 599, 602, 640, 641, 654, 666, 712, 728, 752, K7, K19.

OESE-E-13645960-000 20180504

AGEZER1	ENALBANT	FKARADE3	

H625 PP PHASE RELEASE

REMOVED PHJC46-70002-BB
RELEASED PHJC46-70002-BC

A13631278, A13654944, A13663628, A13666535

DCRs
565, 566, 567, 568, 569, 570, 571, 572, 573, 574, 575, 582, 583, 584, 585, 586, 587, 588, 589, 590, 591, 629, 630, 631, 632, 633, 634, 635, 636, 367, 638, 639, 672, 744, 753, K22, K23, K24, K25, K31, K32, K33, K34, K35, K36, K38, K39, K41, K44, K45, K46, K47, K48, K49, K50, K51, K52, K53, K54, K55, K56, K57, K58, K61, K62, K69, K70, K83, K84, K88, K96, K99, K106, K107, K108, K142, K145, K146, K153, K157, K158, K160, K161, K163, K170, K178, K190, K191, K192, K199, K200, K211, K275, K314, K315

OESE-E-13697250-000 20180809

FKARADE3	AGEZER1	TDERDIYO	

H625 MP1 PHASE RELEASE

REMOVED PHJC46-70002-BC
RELEASED PHJC46-70002-BD

A13672762

C13644853,C13644964,C13648515,C13641252,C13644873,C13644970, C13644852,C13644972,C13644965,C13644899,C13644918,C13644853, C13644864,C13644846,C13647199,C13645073,C13645074,C13645079, C13645075,C13645076,C13644703,C13644723

DCRs
K159,K165,K166,K167,K168,K169,K171,K172,K173,K174,K175,K197, K277,K278,K279,K287,K290,K291,K292,K293,K294,K319

OESE-E-13735631-000 20181002

FKARADE3	AGEZER1	TDERDIYO	

H625 MP2 PHASE RELEASE

REMOVED PHJC46-70002-BD
RELEASED PHJC46-70002-BE

A13691714

DCRs
K289,K302,K303,K305,K335,K336,K337,K361,K362,K369,K370,K371,K375

OESE-E-13756922-000 20181101

FKARADE3	AGEZER1	TDERDIYO	

REFERENCE

PART MUST COMPLY WITH RESTRICTED SUBSTANCE MANAGEMENT STANDARD WSS-M99P9999 A1 TO SAFEGUARD HEALTH SAFETY AND THE ENVIRONMENT

DRAFTED IN ACCORDANCE WITH FORD MOTOR COMPANY ENGINEERING CAD AND DRAFTING STANDARDS VERSION 27.0

3RD ANGLE PROJ
DIMENSIONS ARE IN MILLIMETERS

CAD TYPE	CAD LOC.	CAD FILE	DTM
X-E3	-----	PHJC46-70002-BE	IS MASTER

OPER NO.	UNIT	DRAWING	SIZE
-----	-----		A1

DESIGN	DETAIL	TITLE:	SHT 1 OF 5
fkarade3	-----	MY 2019 H625 - MP2 Design INDEX	
CHECKED	SAFETY		
-----	-----		

SCALE	DATE	DIVISION: EESE
NTS	20170315	PLANT: -----

FORD MOTOR COMPANY

Modified By: AGEZER1
Date Changed: 11/1/2018

MY 2019 H625 MP2 Design
B3.03 - ENGINE CONTROL MODULE

LTRS	REVISIONS		
ORIGINATOR	CHECKER	ENGR APP	MATL APP

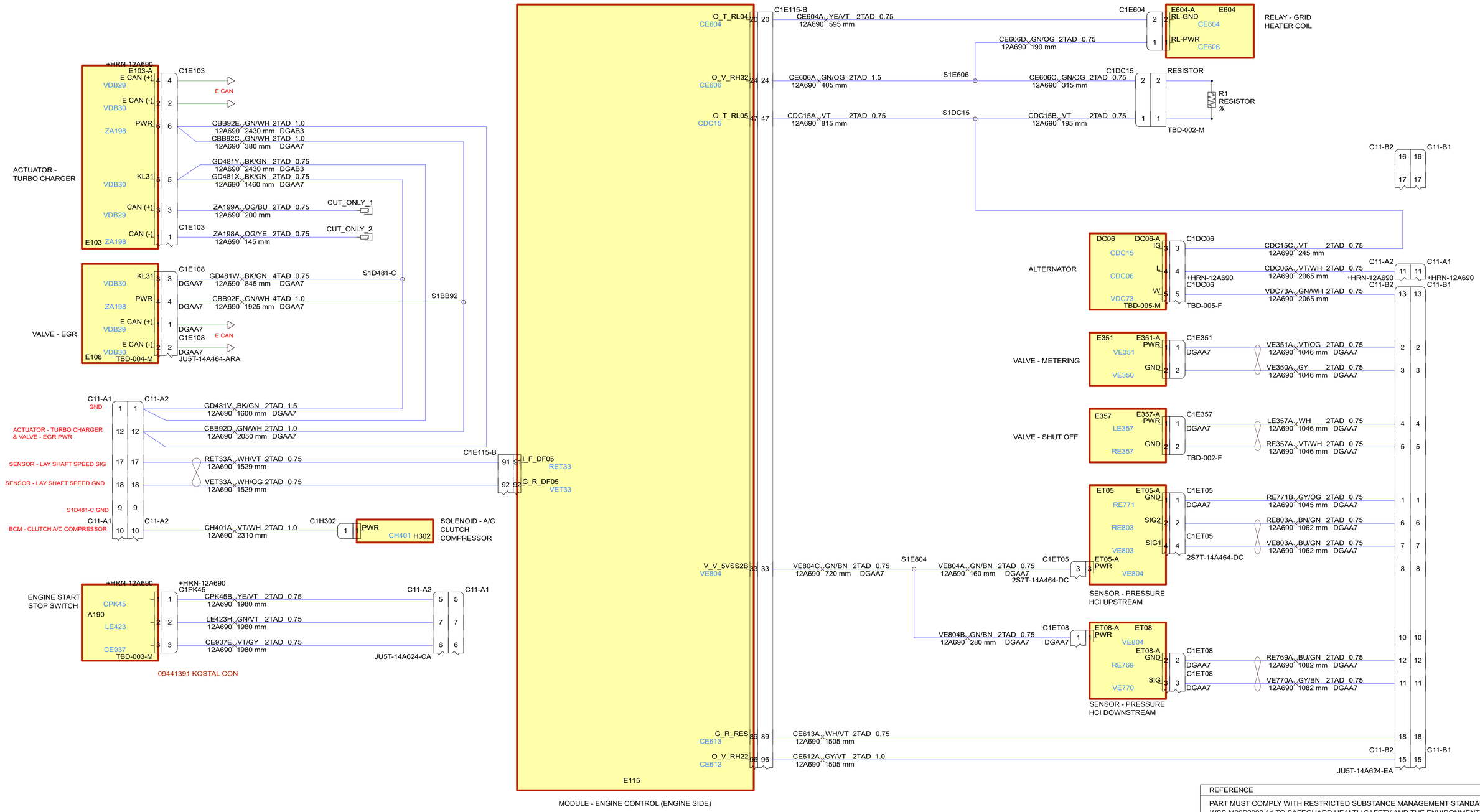

REFERENCE

PART MUST COMPLY WITH RESTRICTED SUBSTANCE MANAGEMENT STANDARD WSS-M99P9999 A1 TO SAFEGUARD HEALTH SAFETY AND THE ENVIRONMENT

DRAFTED IN ACCORDANCE WITH FORD MOTOR COMPANY ENGINEERING CAD AND DRAFTING STANDARDS VERSION 27.0

3RD ANGLE PROJ
DIMENSIONS ARE IN MILLIMETERS

CAD TYPE	CAD LOC.	CAD FILE	DTM
X-E3	-----	PHJC46-70B051-A1	IS MASTER

OPER NO.	UNIT	DRAWING	SIZE
-----	-----		A1

DESIGN	DETAIL	TITLE:	SHT 2 OF 5
fkarade3	-----	MY 2019 H625 - MP2 Design ENGINE CONTROL MODULE - ENGINE SIDE	
CHECKED	SAFETY		
-----	-----		
SCALE	DATE	DIVISION: EESE	
NTS	20150731	PLANT: -----	

FORD MOTOR COMPANY

Modified By: AGEZER1
Date Changed: 11/12/2018

MY 2019 H625 MP2 Design
B3.03 - ENGINE CONTROL MODULE

LTRS	REVISIONS		
ORIGINATOR	CHECKER	ENGR APP	MATL APP

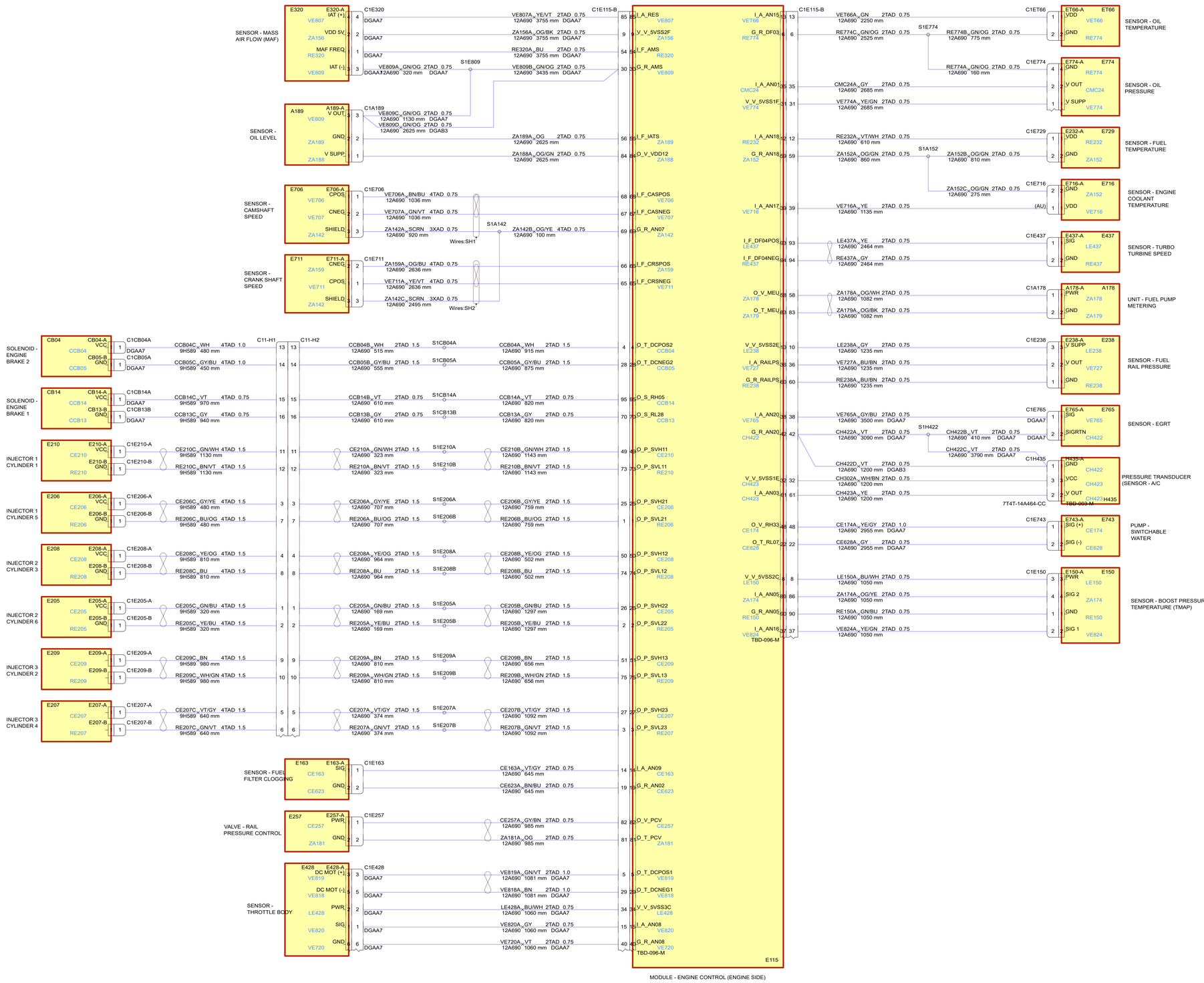

REFERENCE N/A

PART MUST COMPLY WITH RESTRICTED SUBSTANCE MANAGEMENT STANDARD WSS-M99P9999 A1 TO SAFEGUARD HEALTH SAFETY AND THE ENVIRONMENT

DRAFTED IN ACCORDANCE WITH FORD MOTOR COMPANY ENGINEERING CAD AND DRAFTING STANDARDS VERSION 27.0

3RD ANGLE PROJ DIMENSIONS ARE IN MILLIMETERS

CAD TYPE	CAD LOC.	CAD FILE	DTM
X-E3	-----	PHJC46-70B051-A2	IS MASTER
OPER NO.	UNIT	DRAWING	SIZE
-----	-----		A0
DESIGN	DETAIL	TITLE:	SHT 3 OF 5
fkarade3	-----	MY 2019 H625 - MP2 Design ENGINE CONTROL MODULE - ENGINE SIDE	
CHECKED	SAFETY		
-----	-----		
SCALE	DATE	DIVISION: EESE	
NTS	20150731	PLANT: -----	

FORD MOTOR COMPANY

WORD BY: AUGUSTI
EXPIRED DATE: 11/1/2017

PRINTED COPIES ARE UNCONTROLLED

MY 2019 H625 MP2 Design
C3.01 - ENGINE CAN J1939 NETWORK

LTRS	REVISIONS		
ORIGINATOR	CHECKER	ENGR APP	MATL APP

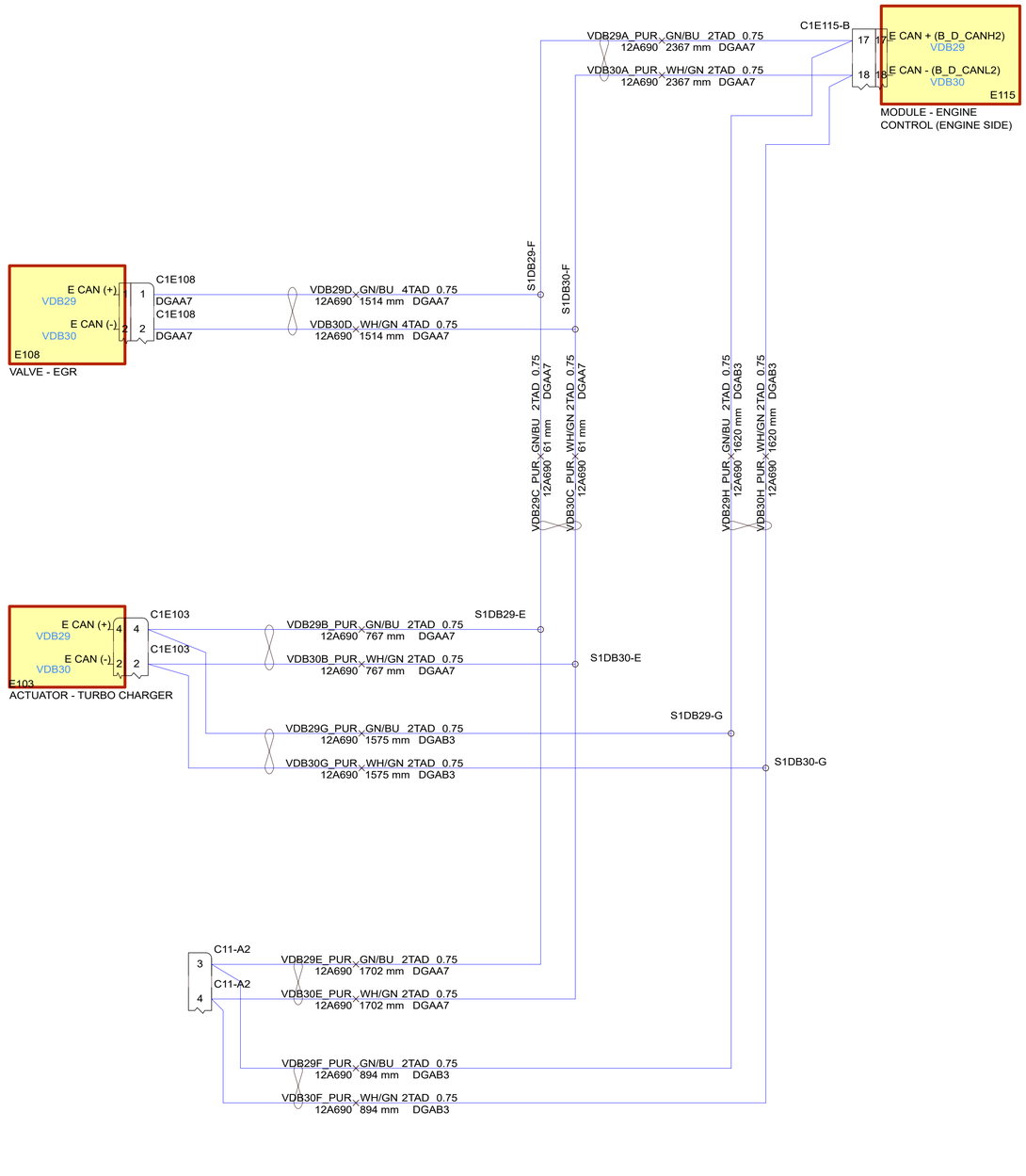

REFERENCE

PART MUST COMPLY WITH RESTRICTED SUBSTANCE MANAGEMENT STANDARD WSS-M99P9999 A1 TO SAFEGUARD HEALTH SAFETY AND THE ENVIRONMENT

DRAFTED IN ACCORDANCE WITH FORD MOTOR COMPANY ENGINEERING CAD AND DRAFTING STANDARDS VERSION 27.0

3RD ANGLE PROJ
DIMENSIONS ARE IN MILLIMETERS

CAD TYPE	CAD LOC.	CAD FILE	DTM
X-E3	-----	PHJC46-70C030-A2	IS MASTER

OPER NO.	UNIT	DRAWING	SIZE
-----	-----		A1

DESIGN	DETAIL	TITLE:	SHT 4 OF 5
sakay	-----	MY 2019 H625 - MP2 Design ENGINE CAN J1939 NETWORK	
CHECKED	SAFETY		
-----	-----		

SCALE	DATE	DIVISION: EESE
NTS	20161027	PLANT: -----

FORD MOTOR COMPANY

Modified By: AGEZER1
Date Changed: 11/1/2018

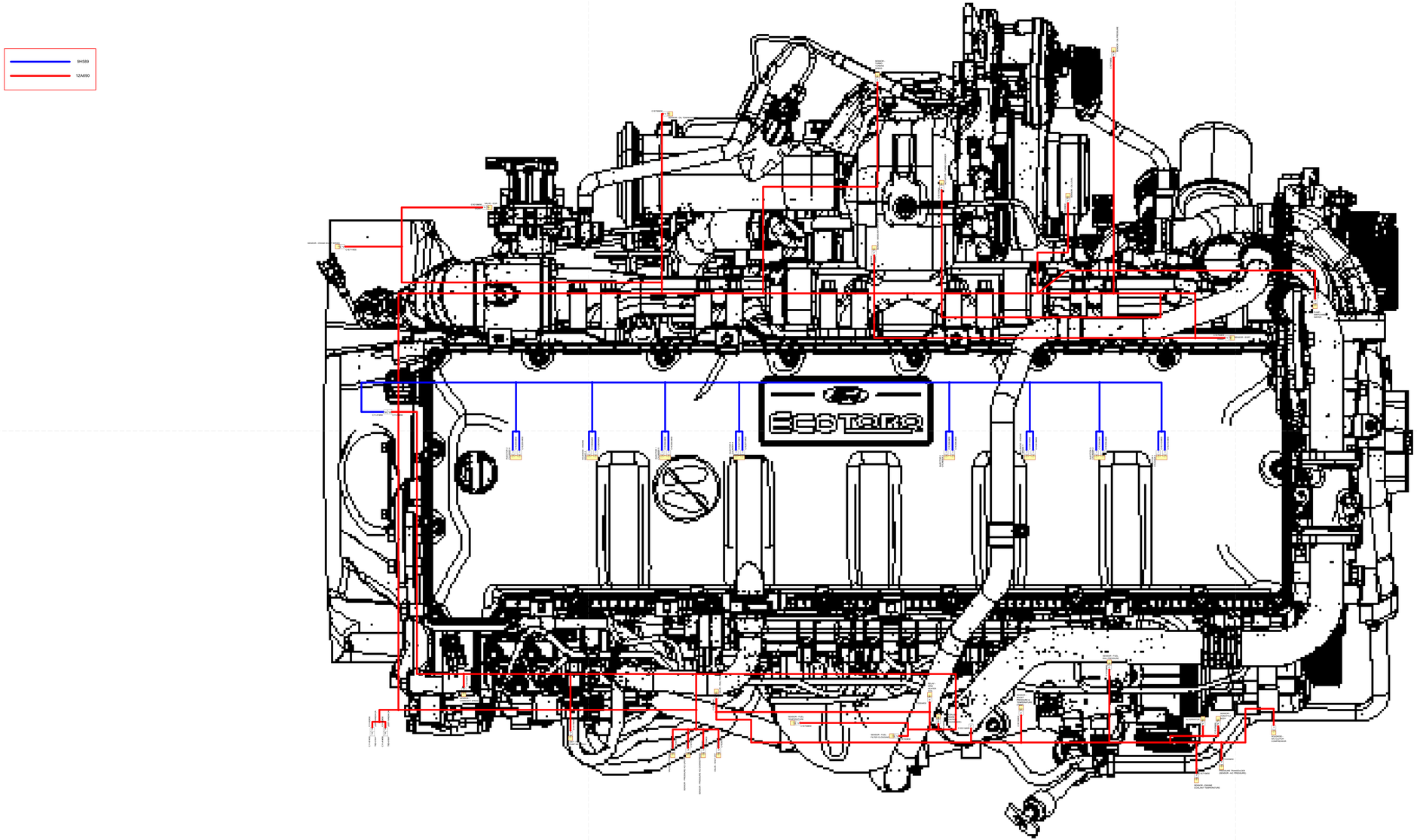
9H589
12A690
ECOTORQ