H625 2022 LP2 Design
TABLE OF CONTENT

B3 POWERTRAIN ENGINE CONTROLS

PHJC46-70B051-A1 ENGINE CONTROL SYSTEM (ENGINE SIDE)
PHJC46-70B051-A2 ENGINE CONTROL SYSTEM (ENGINE SIDE)

C3 VEHICLE NETWORKS

PHJC46-70C030-A2 ENGINE CAN J1939 NETWORK

TOPOLOGY SHEET

LTRS	REVISIONS		
ORIGINATOR	CHECKER	ENGR APP	MATL APP
RELEASED OESE-E-13302392-028			170316
FKARADE3	AGEZER1	SKILICAR	MATL APP
H625 TT PHASE RELEASE REMOVED PHJC46-70002-BA RELEASED PHJC46-70002-BB OESE-E-13645960-000			20180504
AGEZER1	ENALBANT	FKARADE3	
H625 PP PHASE RELEASE REMOVED PHJC46-70002-BB RELEASED PHJC46-70002-BC OESE-E-13697250-000			20180809
FKARADE3	AGEZER1	TDERDIYO	
H625 MP1 PHASE RELEASE REMOVED PHJC46-70002-BC RELEASED PHJC46-70002-BD OESE-E-13735631-000			20181002
FKARADE3	AGEZER1	TDERDIYO	
H625 MP2 PHASE RELEASE REMOVED PHJC46-70002-BD RELEASED PHJC46-70002-BE OESE-E-13756922-000			20181101
FKARADE3	AGEZER1	TDERDIYO	
H625 PJ1 PHASE RELEASE REMOVED PHJC46-70002-BE RELEASED PHJC46-70002-BF OESE-E-13775725-000			20190515
NYAYLA1	AGEZER1	TDERDIYO	
H625 LP3 PHASE RELEASE REMOVED PHJC46-70002-BF RELEASED PHJC46-70002-BG OESE-E-13968480-000			20191202
NYAYLA1	AGEZER1	TDERDIYO	
H625 2020 LP2 PHASE RELEASE REMOVED PHJC46-70002-BG RELEASED PHJC46-70002-BH OESE-E-14163206-000			20210126
NYAYLA1	AGEZER1	TDERDIYO	
H625 2021 LP2 PHASE RELEASE REMOVED PHJC46-70002-BH RELEASED PHJC46-70002-BJ OESE-E-14293339-000			20211102
NYAYLA1	EBULGU	TDERDIYO	
H625 2022 LP2 PHASE RELEASE REMOVED PHJC46-70002-BJ RELEASED PHJC46-70002-BK OESE-E-14477012-000			20230109
NYAYLA1	EBULGU	TDERDIYO	

REFERENCE

PART MUST COMPLY WITH RESTRICTED SUBSTANCE MANAGEMENT STANDARD WSS-M99P9999 A1 TO SAFEGUARD HEALTH SAFETY AND THE ENVIRONMENT

DRAFTED IN ACCORDANCE WITH FORD MOTOR COMPANY ENGINEERING CAD AND DRAFTING STANDARDS VERSION 27.0

3RD ANGLE PROJ
DIMENSIONS ARE IN MILLIMETERS

CAD TYPE	CAD LOC.	CAD FILE	DTM
X-E3	-----	PHJC46-70002-BK	IS MASTER
OPER NO.	UNIT	DRAWING	SIZE
-----	-----		A1
DESIGN	DETAIL	TITLE:	SHT 1 OF 5
fkarade3	-----	H625 - 2022 LP2 Design INDEX	
CHECKED	SAFETY		
-----	-----		
SCALE	DATE	DIVISION: EESE	
NTS	20170315	PLANT: -----	

FORD MOTOR COMPANY

Modified By: NYAYLA1
Date Changed: 01/11/2023

H625 - 2022 LP2 Design
B3.03 - ENGINE CONTROL MODULE

LTRS	REVISIONS		
ORIGINATOR	CHECKER	ENGR APP	MATL APP

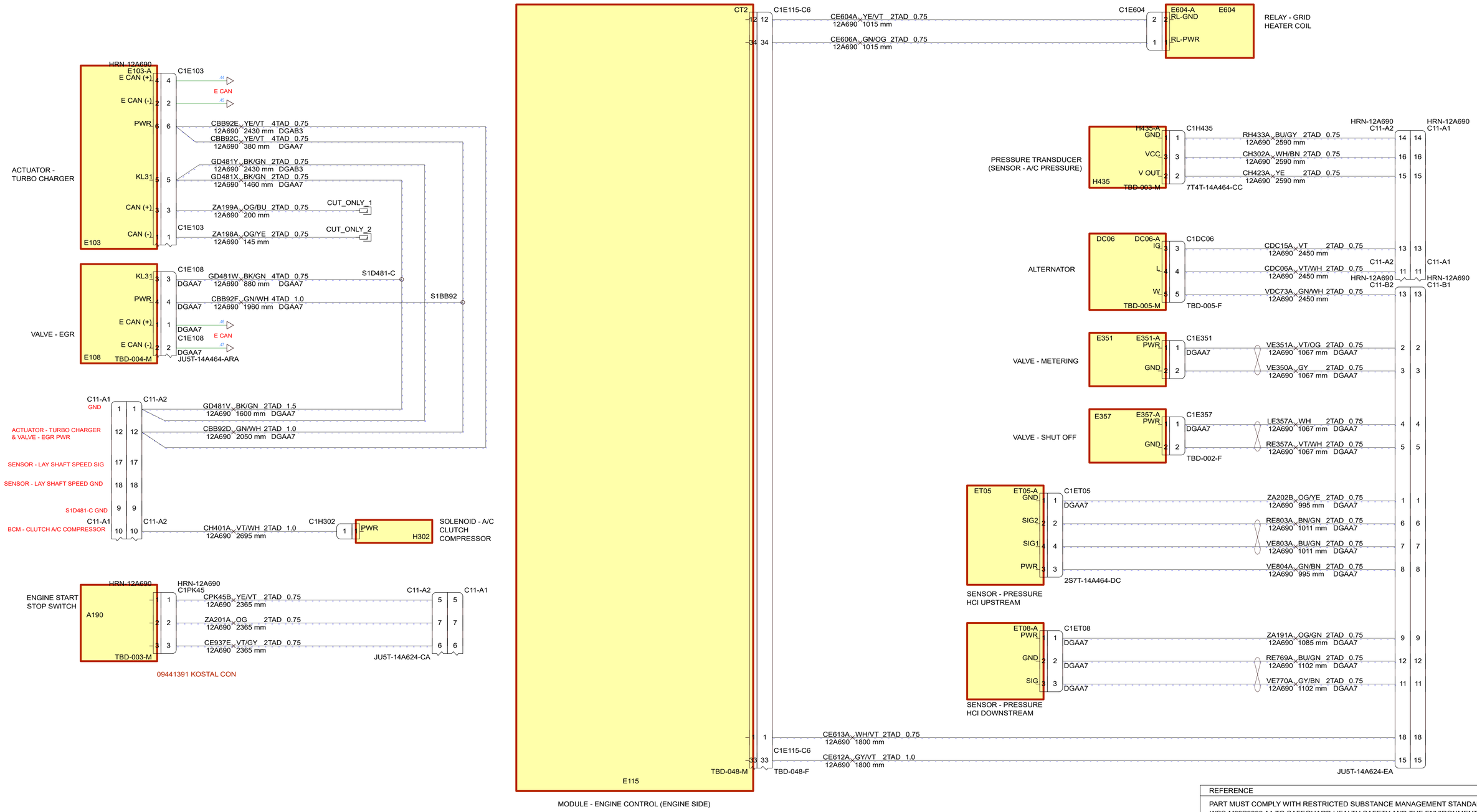

REFERENCE			
PART MUST COMPLY WITH RESTRICTED SUBSTANCE MANAGEMENT STANDARD WSS-M99P9999 A1 TO SAFEGUARD HEALTH SAFETY AND THE ENVIRONMENT			
DRAFTED IN ACCORDANCE WITH FORD MOTOR COMPANY ENGINEERING CAD AND DRAFTING STANDARDS VERSION 27.0		3RD ANGLE PROJ DIMENSIONS ARE IN MILLIMETERS	
CAD TYPE X-E3	CAD LOC. -----	CAD FILE PHJC46-70B051-A1	DTM IS MASTER
OPER NO. -----	UNIT -----	DRAWING	SIZE A1
DESIGN fkarade3	DETAIL -----	TITLE: H625 - 2022 LP2 Design ENGINE CONTROL MODULE - ENGINE SIDE	SHT 2 OF 5
CHECKED -----	SAFETY -----		
SCALE NTS	DATE 20150731	DIVISION: EESE	
		PLANT: -----	

FORD MOTOR COMPANY

Modified By: NYAYLA1
Last Changed: 1/18/2023

H625 - 2022 LP2 Design
B3.03 - ENGINE CONTROL MODULE

LTRS	REVISIONS		
ORIGINATOR	CHECKER	ENGR APP	MATL APP

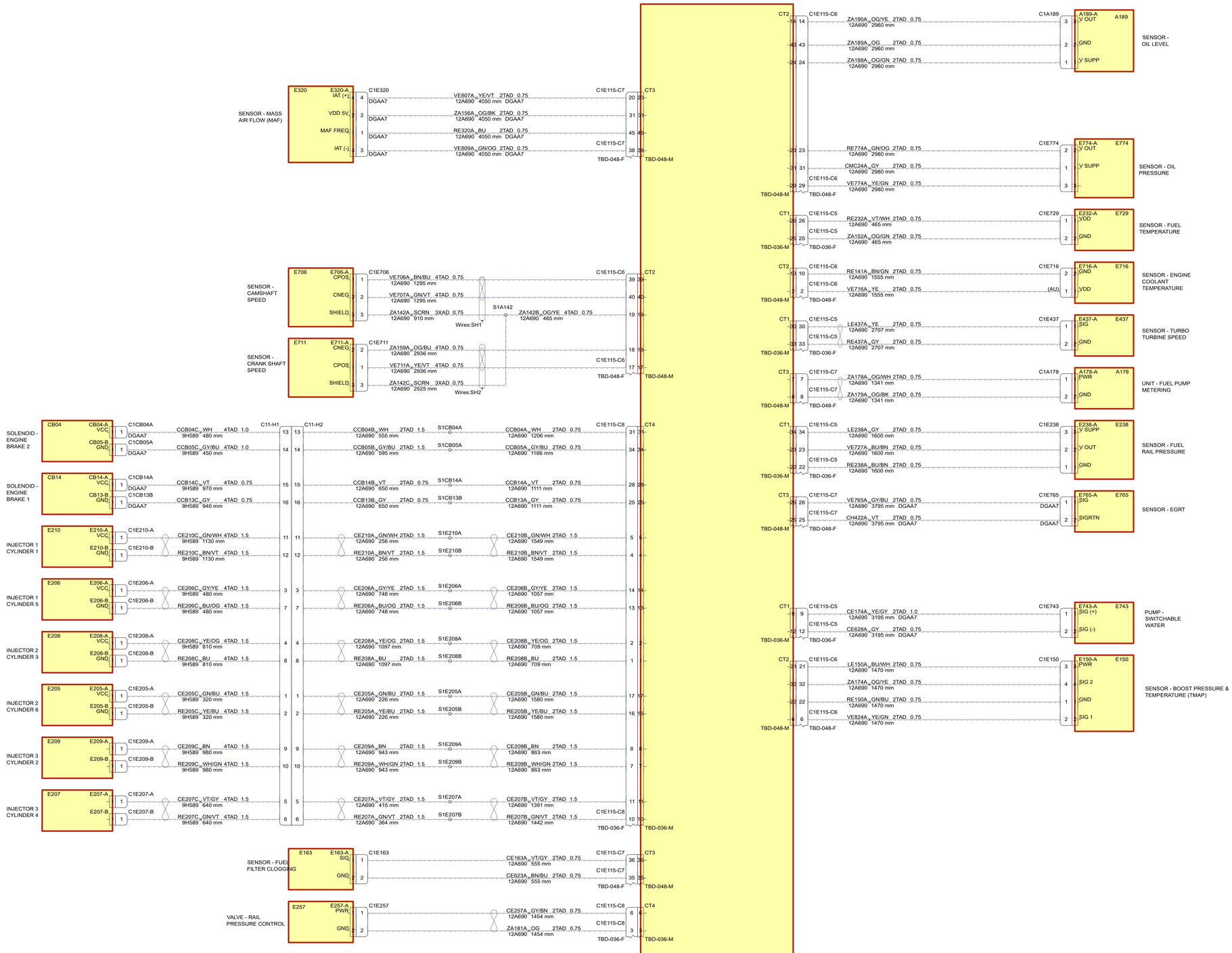

REFERENCE N/A	
PART MUST COMPLY WITH RESTRICTED SUBSTANCE MANAGEMENT STANDARD WSS-M99P9999 A1 TO SAFEGUARD HEALTH SAFETY AND THE ENVIRONMENT	
DRAFTED IN ACCORDANCE WITH FORD MOTOR COMPANY ENGINEERING CAD AND DRAFTING STANDARDS VERSION 27.0	3RD ANGLE PROJ DIMENSIONS ARE IN MILLIMETERS
CAD TYPE X-E3 / CAD LOC. -----	CAD FILE PHJC46-70B051-A2 / DTM IS MASTER
OPER NO. ----- / UNIT -----	DRAWING / SIZE A0
DESIGN fkarade3 / DETAIL -----	TITLE: H625 - 2022 LP2 Design ENGINE CONTROL MODULE - ENGINE SIDE / SHT 3 OF 5
CHECKED ----- / SAFETY -----	
SCALE NTS / DATE 20150731	DIVISION: EESE / PLANT: -----

FORD MOTOR COMPANY

PRINTED COPIES ARE UNCONTROLLED

H625 - 2022 LP2 Design
C3.01 - ENGINE CAN J1939 NETWORK

LTRS	REVISIONS		
ORIGINATOR	CHECKER	ENGR APP	MATL APP

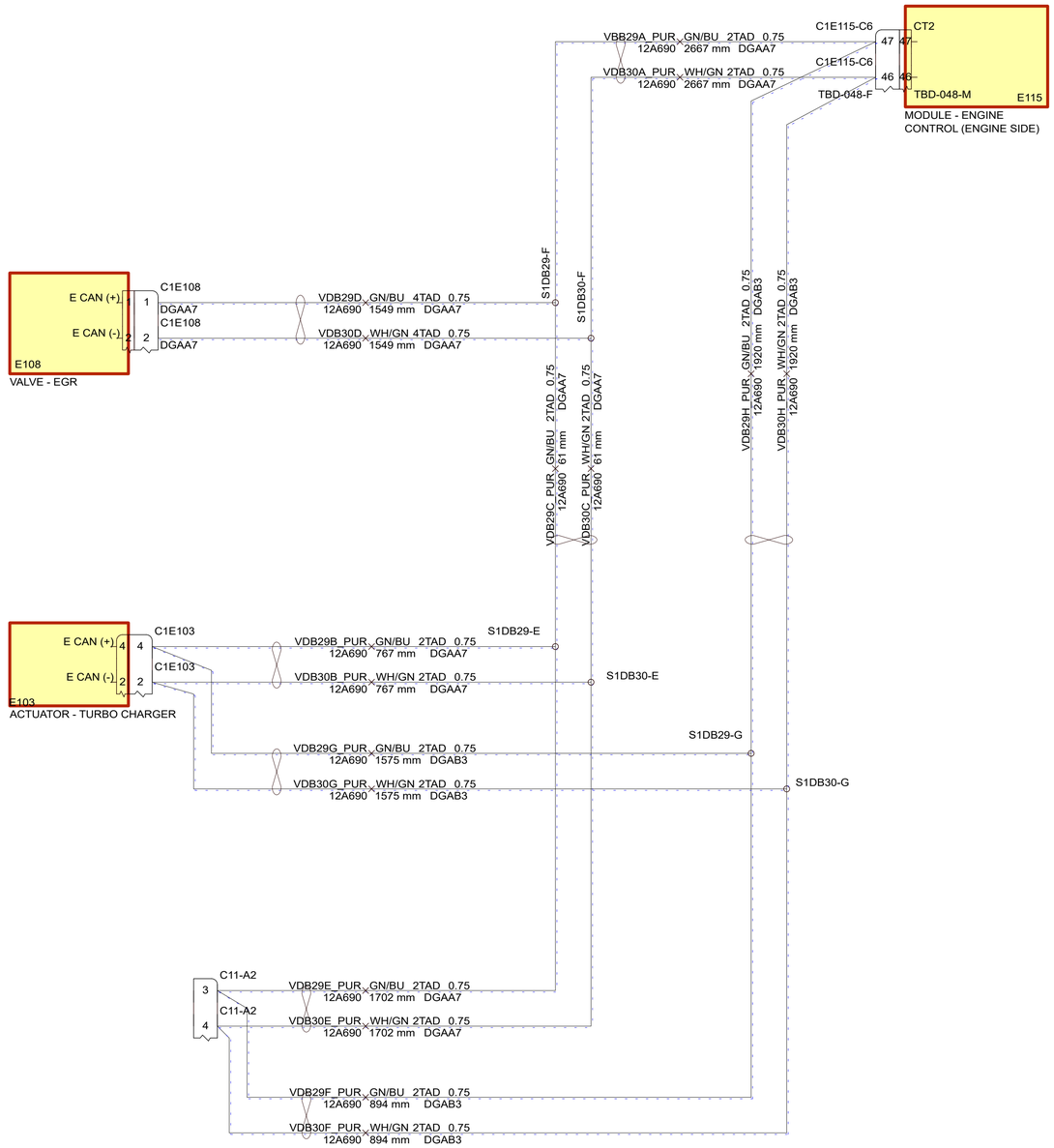

REFERENCE

PART MUST COMPLY WITH RESTRICTED SUBSTANCE MANAGEMENT STANDARD WSS-M99P9999 A1 TO SAFEGUARD HEALTH SAFETY AND THE ENVIRONMENT

DRAFTED IN ACCORDANCE WITH FORD MOTOR COMPANY ENGINEERING CAD AND DRAFTING STANDARDS VERSION 27.0

3RD ANGLE PROJ
DIMENSIONS ARE IN MILLIMETERS

CAD TYPE	CAD LOC.	CAD FILE	DTM IS MASTER
X-E3	-----	PHJC46-70C030-A2	
OPER NO.	UNIT	DRAWING	SIZE
-----	-----		A1
DESIGN	DETAIL	TITLE:	SHT 4 OF 5
sakay	-----	H625 - 2022 LP2 Design ENGINE CAN J1939 NETWORK	
CHECKED	SAFETY		
-----	-----		
SCALE	DATE	DIVISION: EESE	
NTS	20161027	PLANT: -----	

FORD MOTOR COMPANY

Modified By: NYAYLA1
Last Changed: 1/18/2023
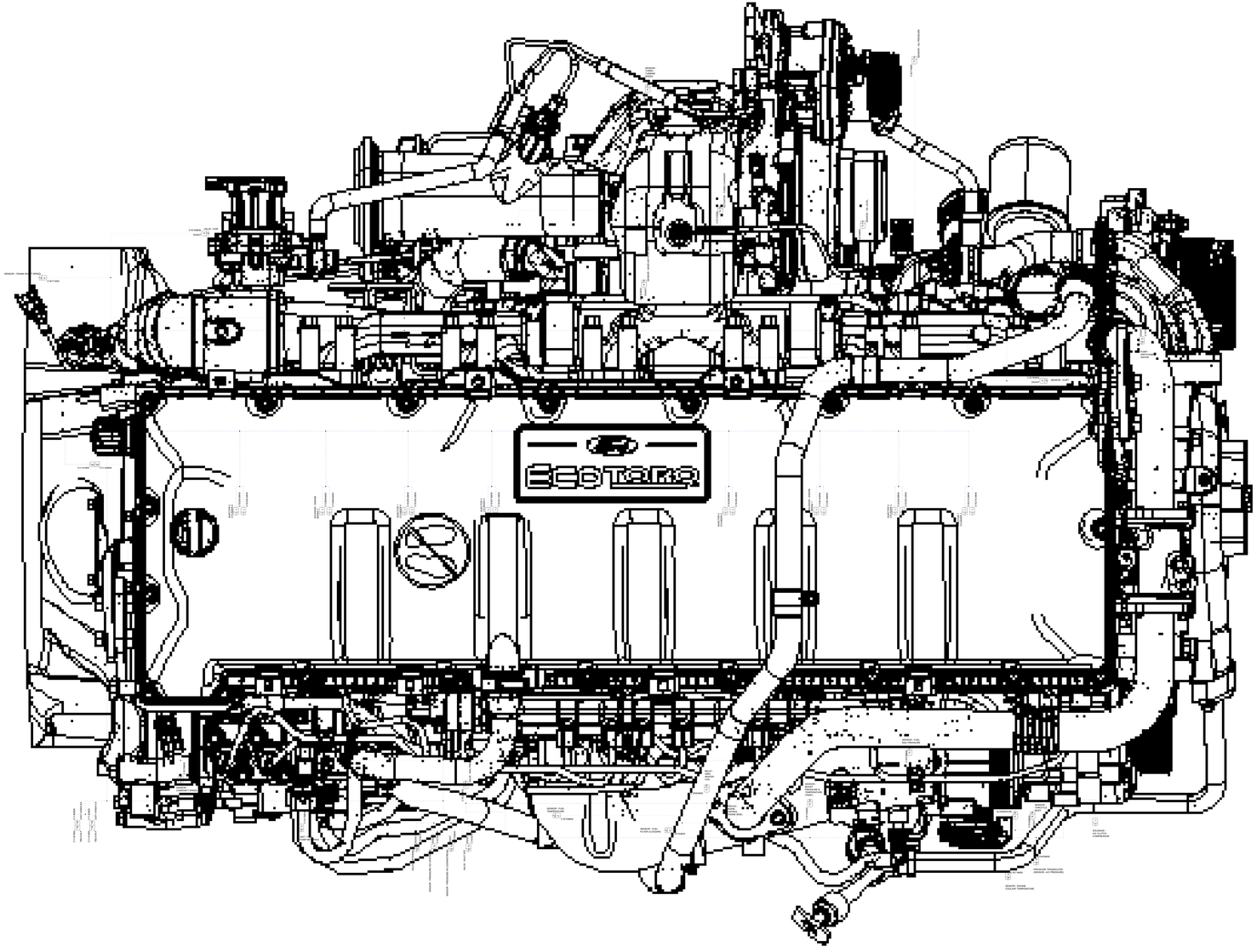
9H589	
12A690